Freescale Semiconductor, Inc.
User's Guide

Document Number: FRDMKW40ZUG
Rev. 2, 10/2015

FRDM-KW40Z Freescale Freedom Development Board

User's Guide

1 Introduction

This guide describes the hardware for the FRDM-KW40Z Freescale Freedom development board. The FRDM-KW40Z Freedom development board is a small, low-power, and cost-effective evaluation and development board for application prototyping and demonstration of the MKW40Z SoC family of devices. These evaluation boards offer easy-to-use mass-storage-device mode flash programmer, a virtual serial port, and standard programming and run-control capabilities.

The MKW40Z SoC is an ultra-low-power, highly integrated single-chip device that enables Bluetooth Low Energy (BLE) and/or IEEE® Std. 802.15.4/RF connectivity for portable, ultra-low-power embedded systems.
The MKW40Z SoC family integrates a radio transceiver operating in the 2.36 GHz to 2.48 GHz range (supporting a range of FSK/GFSK and O-QPSK modulations), ARM® Cortex®-M0+ CPU, 160 KB flash memory and 20 KB SRAM, BLE Link Layer hardware, 802.15.4 packet processor hardware, and peripherals optimized to meet the requirements of the target applications.

1.1 Audience

This guide is intended for system designers.

Contents

1. Introduction 1
1.1. Audience 1
2. Safety information 2
2.1. FCC guidelines 2
2.2. Regulatory approval for Canada (IC RSS 210) 3
2.3. Electrostatic discharge considerations 3
2.4. Disposal instructions 3
3. FRDM-KW40Z overview and description 4
3.1. Introduction 4
3.2. Board features 4
3.3. Serial and Debug Adapter 7
4. FRDM-KW40Z development board 8
4.1. FRDM-KW40Z board overview 8
4.2. Functional description 12
4.3. Schematic, board layout, and bill of materials 24
5. PCB manufacturing specifications 33
5.1. Single PCB construction 34
5.2. Panelization 35
5.3. Materials 35
5.4. Solder mask 35
5.5. Silk screen 35
5.6. Electrical PCB testing 35
5.7. Packaging 35
5.8. Hole specification/tool table 35
5.9. File descriptions 36
6. Revision history 36

© 2015 Freescale Semiconductor, Inc. All rights reserved.

2 Safety information

2.1 FCC guidelines

This equipment is to be used by developers for evaluation purposes only, and must not be incorporated into any other device or system. This device must not be sold to the general public. Integrators are responsible for reevaluating the end product (including the transmitter) and obtaining a separate FCC authorization.

The FCC approval of this device only covers the original configuration of this device (as supplied). Any modifications to this product (including changes shown in this guide) may violate the rules of the Federal Communications Commission and Industry Canada and make the operation of the product unlawful.

2.1.1 Labeling

The FCC labels are located on the back of the board.

2.1.2 Operating conditions

The device must comply with part 15 of the FCC rules. Operation is subject to these two conditions:

- This device must not cause harmful interference.
- This device must accept any interference received, including interference that can cause undesired operation.

2.1.3 Exposure limits

The device must comply with FCC radiation exposure limits set forth for an uncontrolled environment. Install the antenna(s) used by the device to provide a separation distance of at least 8 inches (20 cm) from all persons.

2.1.4 Antenna restrictions

An intentional radiator must be designed to ensure that no antenna (other than that furnished by the responsible party) is used with the device. Using a permanently attached antenna or an antenna that uses a unique coupling to the intentional radiator is considered sufficient to comply with the provisions of this Section. The manufacturer may design the unit so that a broken antenna can be replaced by the user, but using a standard antenna jack or electrical connector is prohibited. This requirement does not apply to carrier current devices or to devices operated under the provisions of Sections 15.211, 15.213, 15.217, 15.219, or 15.221 of the IEEE 802.15.4 Standard. This requirement does not apply to intentional radiators that must be professionally installed (such as perimeter protection systems and field disturbance sensors) or to other intentional radiators which must be measured at the installation site (in accordance with Section 15.31(d)). The installer is responsible for ensuring that a proper antenna is employed (to not exceed the limits in this Part).

2.2 Regulatory approval for Canada (IC RSS 210)

This equipment complies with Industry Canada license-exempt RSS standard(s). Operation is subject to these two conditions:

1. This board must not cause interference.
2. This board must accept any interference, including interference that may cause undesired operation of the device.

2.2.1 26 PART 5—Appendix

Le présent appareil est conforme aux CNR d'Industrie Canada applicables aux appareils radio exempts de licence. L'exploitation est autorisée aux deux conditions suivantes:

1. l'appareil ne doit pas produire de brouillage, et
2. l'utilisateur de l'appareil doit accepter tout brouillage radioélectrique subi, même si le brouillage est susceptible d'en compromettre le fonctionnement.

2.3 Electrostatic discharge considerations

Although the damage from electrostatic discharge (ESD) is much less common on these devices when compared to the early CMOS circuits, use standard handling precautions to avoid exposure to static discharge. Qualification tests are performed to ensure that these devices can withstand exposure to reasonable levels of static without suffering any permanent damage.

All ESD testing must conform to the JESD22 Stress Test Qualification for Commercial Grade Integrated Circuits. During the device qualification, ESD stresses were performed for the Human Body Model (HBM), the Machine Model (MM), and the Charge Device Model (CDM).

All latch-up test testing must conform to the JESD78 IC Latch-Up Test.

When operating or handling the development boards or components, Freescale strongly recommends using at least grounding wrist straps, plus any (or all) of these ESD dissipation methods:

- Flexible fabric, solid fixed size, or disposable ESD wrist straps.
- Static control workstations, static control monitors and table or floor static control systems.
- Static control packaging and transportation materials and environmental systems.

2.4 Disposal instructions

This product may be subject to special disposal requirements. For product disposal instructions, see freescale.com/productdisposal.

3 FRDM-KW40Z overview and description

3.1 Introduction

The FRDM-KW40Z development board is an evaluation environment supporting Freescale MKW40Z SoC transceiver.

The MKW40Z SoC integrates a radio transceiver operating in the 2.36 GHz to 2.48 GHz range (supporting a range of FSK/GFSK and O-QPSK modulations) and an ARM Cortex-M0+ MCU into a single package.

Freescale supports the MKW40Z SoC with tools and software that include hardware evaluation and development boards, software development IDE, applications, drivers, custom PHY usable with IEEE Std. 802.15.4 compatible MAC, BLE Link Layer, and enables the usage of the Bluetooth Low Energy protocol in the MBAN frequency range for proprietary applications.

The FRDM-KW40Z development board consists of the MKW40Z device with 32 MHz reference oscillator crystal, RF circuitry (including antenna), 2-Mbit external serial flash, and supporting circuitry in the popular Freedom form. The board is a standalone PCB and supports application development with Freescale IEEE Std. 802.15.4 protocol stacks.

3.2 Board features

3.2.1 FRDM-KW40Z board

The FRDM-KW40Z development board is based on Freescale Freedom development platform. It is the most diverse reference design containing the MKW40Z device and all necessary I/O connections for use as a standalone board, or connected to an application. You can also connect it to the Freedom development platform.

Figure 1 shows the FRDM-KW40Z development board. A similar board (not shown) uses the MKW40Z device.

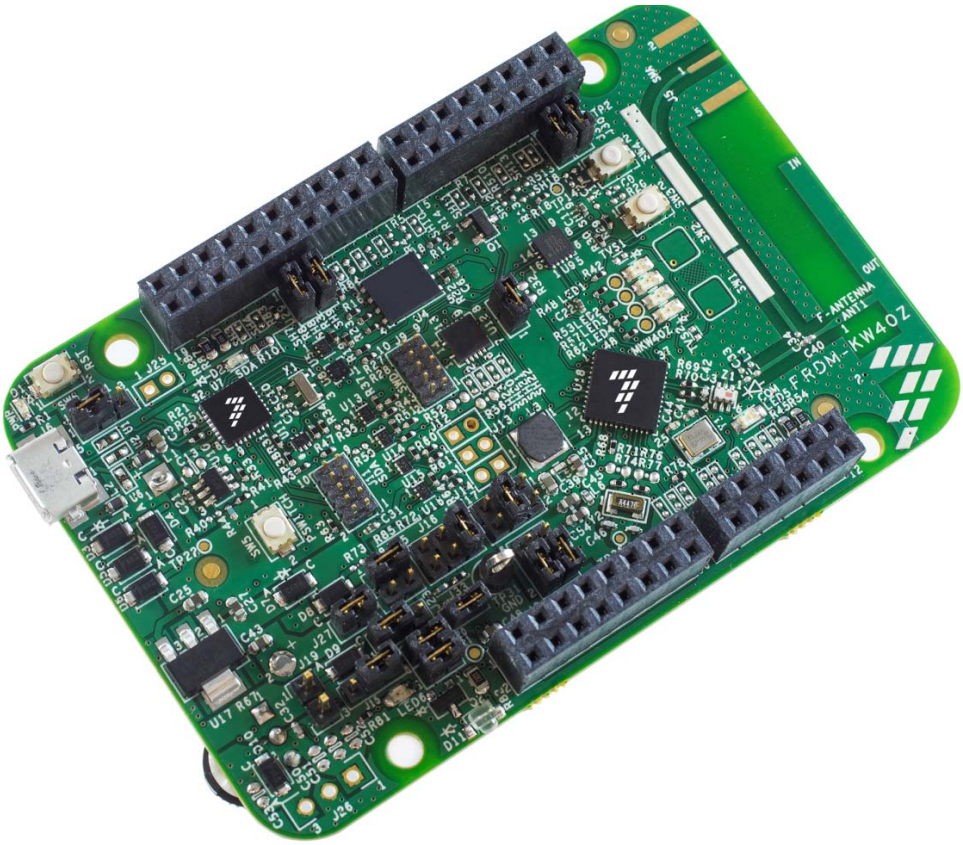

Figure 1. FRDM-KW40Z Freedom development board

The FRDM-KW40Z development board has these features:

- Freescale ultra-low-power MKW40Z SoC BLE/IEEE Std. 802.15.4 platform.
- IEEE Std. 802.15.4, 2006-compliant transceiver supporting 250 kbps O-QPSK data in 5.0 MHz channels, and full spread-spectrum encoding and decoding.
- Fully compliant Bluetooth v4.1 Low Energy (BLE).
- IEEE 802.15.4-compliant wireless node.
- Reference design area with small-footprint, low-cost RF node.
  - Differential input/output port used with external balun for single-port operation.
  - Low count of external components.
  - Programmable output power from -20 dBm to +5 dBm at the SMA connector, no harmonic trap, with DC/DC Bypass and Buck modes of operation.
  - Receiver sensitivity is -102 dBm, typical (@1 % PER for 20-byte payload packet) for 802.15.4 applications, at the SMA connector.
  - Receiver sensitivity is -91 dBm (for BLE applications).
- Integrated PCB inverted F-type antenna and SMA RF port.
- Selectable power sources.
- DC-DC converter with Buck, Boost, and Bypass operation modes.

- 32 MHz reference oscillator.
- 32 kHz reference oscillator.
- 2.4 GHz frequency operation (ISM and MBAN).
- External serial flash memory for Over-the-Air Programming (OTAP) support.
- Integrated Open-Standard Serial and Debug Adapter (OpenSDA).
- Cortex 10-pin (0.05″) SWD debug port for target MCU.
- Cortex 10-pin (0.05″) JTAG port for OpenSDA updates.
- Four red LED indicators.
- One blue LED indicator.
- Two push-button switches.
- Two TSI buttons.

This figure shows the main board features and Input/Output headers for the Freescale FRDM-KW40Z board:

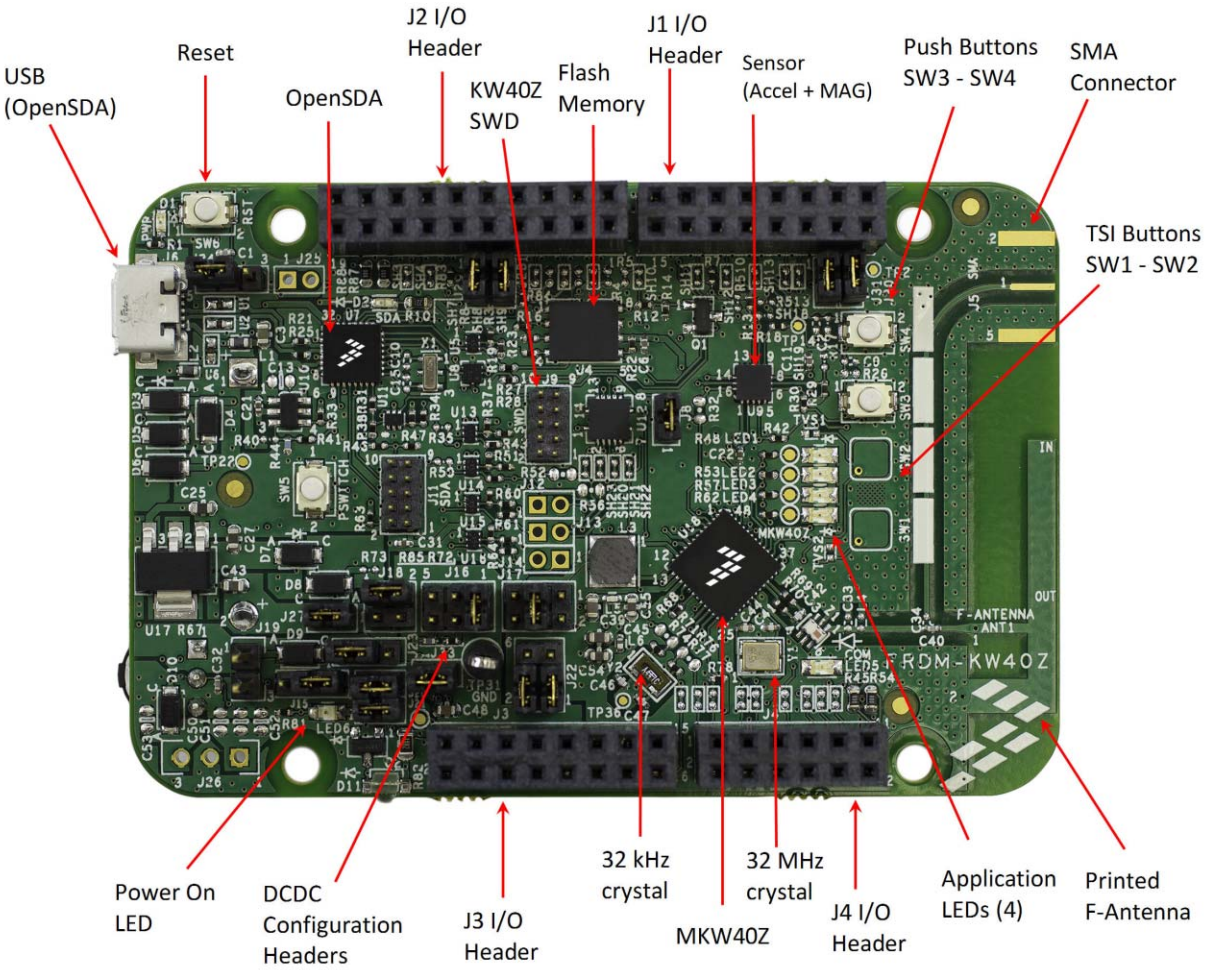

Figure 2. FRDM-KW40Z component placement

3.3 Serial and Debug Adapter

The FRDM-KW40Z development board includes OpenSDA v2.1-a serial and debug adapter circuit that includes an open-source hardware design, an open-source bootloader, and debug interface software. It bridges serial and debug communications between a USB host and an embedded target processor as shown in Figure 3. The hardware circuit is based on a Freescale Kinetis K20 family microcontroller (MCU) with 128 KB of embedded flash and an integrated USB controller. OpenSDAv2.1 comes preloaded with the CMSIS-DAP bootloader - an open-source mass storage device (MSD) bootloader and the CMSIS-DAP Interface firmware (aka mbed interface), which provides a MSD flash programming interface, a virtual serial port interface, and a CMSIS-DAP debug protocol interface.

For more information on the OpenSDAv2.1 software, see mbed.org and https://github.com/mbedmicro/CMSIS-DAP.

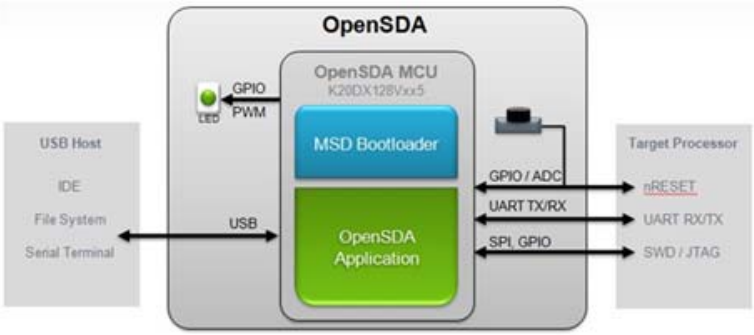

Figure 3. OpenSDAv2.1 high-level block diagram

OpenSDAv2.1 is managed by a Kinetis K20 MCU built on the ARM Cortex-M4 core. The OpenSDAv2.1 circuit includes a status LED (D2) and a pushbutton (SW6). The pushbutton asserts the Reset signal to the MKW40Z target MCU. It can also be used to place the OpenSDAv2.1 circuit into bootloader mode. UART and GPIO signals provide an interface to either the SWD debug port or the K20. The OpenSDAv2.1 circuit receives power when the USB connector J6 is plugged into a USB host.

3.3.1 Virtual serial port

A serial port connection is available between the OpenSDAv2.1 MCU and pins PTC6 and PTC7 of the MKW40Z.

NOTE

To enable the Virtual COM, Debug, and MSD features, mbed drivers must be installed. Download the drivers at https://developer.mbed.org/handbook/Windows-serial-configuration.

4 FRDM-KW40Z development board

4.1 FRDM-KW40Z board overview

The FRDM-KW40Z board is an evaluation board based on Freescale MKW40Z transceiver, and it provides a platform to evaluate the MKW40Z SoC device and to develop software and applications. The core device is accompanied by a 32 MHz reference oscillator crystal, RF circuitry (including antenna), and supporting circuitry.

The FRDM-KW40Z board is intended as the core PCB for MKW40Z device evaluation and application development, and can be used in the following modes:

- Simple standalone evaluation platform.
- Daughter card for other Freedom development platform boards.
- Mother card for application-specific daughter cards, such as a shield card.

4.1.1 PCB features

The FRDM-KW40Z board has these features:

- The Freescale Freedom development board form factor.
- Four-layer, metal, 0.062 inches thick FR4 board.
- LGA footprint and power supply (DC-DC converter).
- DC-DC converter with Buck, Boost, and Bypass operation modes.
- Printed-metal F-Antenna or SMA connector (for conducted measurements).
- 32 MHz reference oscillator crystal.
- 32.768 kHz crystal provided for optional timing oscillator.
- Standard Freedom daughter card mounting interface (shield).
- External serial flash memory for OTAP support.
- Combo sensor—six-axis sensor with integrated linear accelerometer and magnetometer.

4.1.2 Form factor

Figure 4 shows the FRDM-KW40Z board with the location of the I/O headers. This list provides the details:

- J1, J2, J3, and J4:
  - Headers have standard 0.1 in/2.54 mm pin spacing.
  - J2 is 20-pin.
  - J1 and J3 are 16-pin.
  - J4 is 12-pin.
  - All pin headers mounted on the top side of the FRDM-KW40Z board are intended for plugging into matching receptacles on the Freedom platform development board.

- J16, J17, J18, and J22:
  - Headers have standard 0.787 in./2.00 mm pin spacing.
  - J18 is a 2 × 2 pin.
  - J16, J17, and J22 are 2 × 3 pins.
  - Pin headers mounted on the top side of the FRDM-KW40Z are intended to select between power configurations, Bypass, Buck, and Boost.

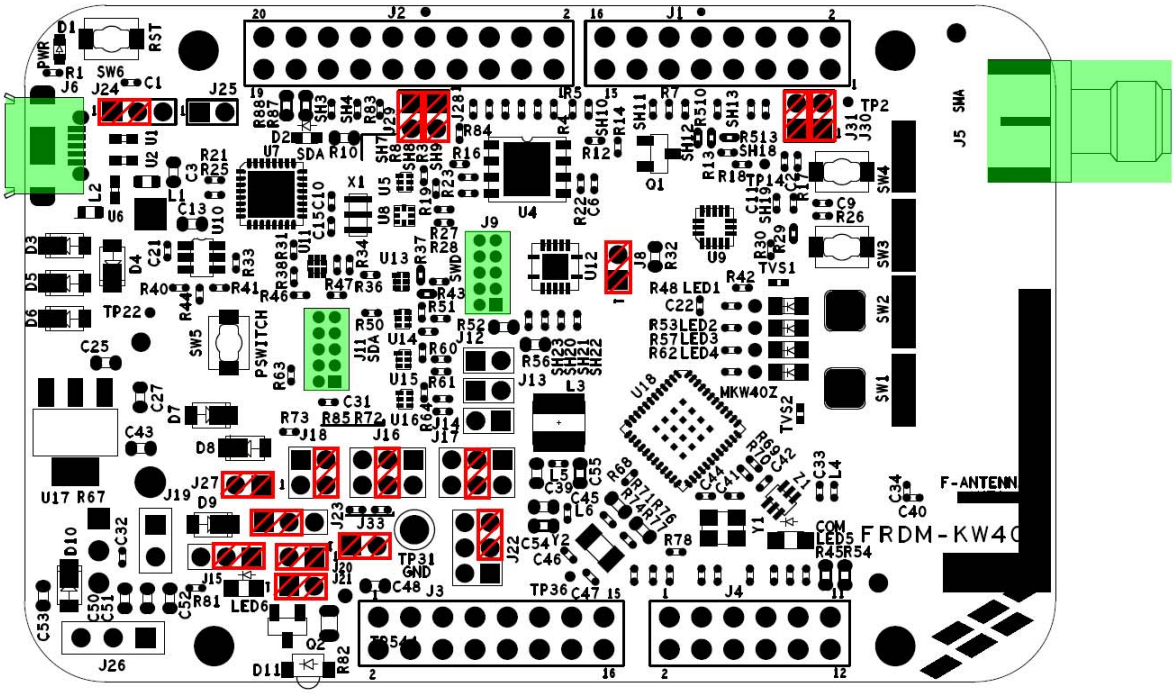

Figure 4. FRDM-KW40Z board with I/O headers locations

This figure shows the footprint of the FRDM-KW40Z board with the board dimensions:

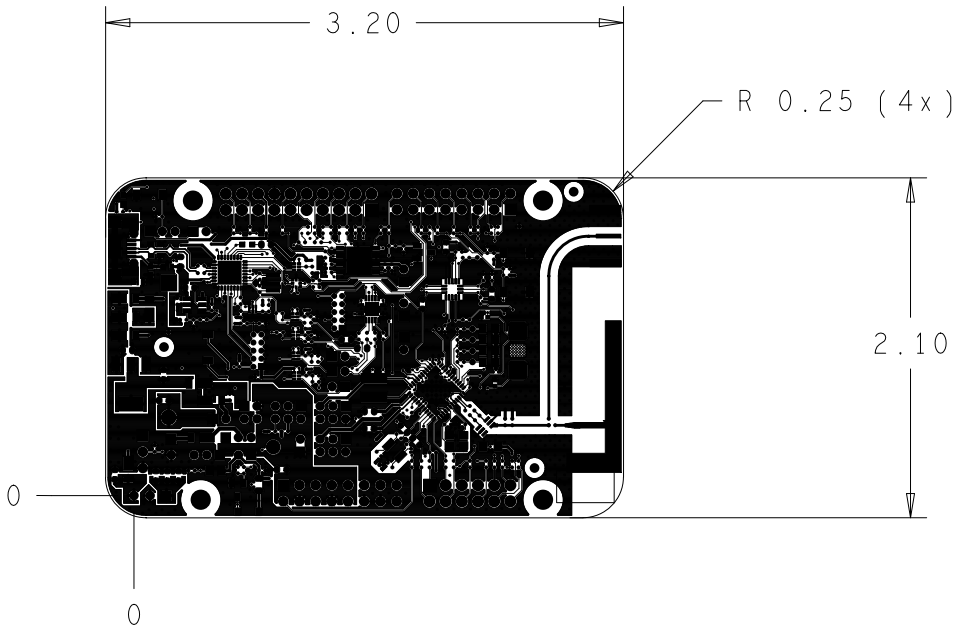

Figure 5. FRDM-KW40Z board dimensions

4.1.3 Board level specifications

Table 1. FRDM-KW40Z board specifications

Parameter	Min	Typ	Max	Units	Notes/Conditions
General					
Size (PCB: X, Y)	—	—	81.2 × 53.3 3.20 × 2.10	mm inches	—
Layer build (PCB)	—	1.57 0.062	—	mm inches	Four-layer
Dielectric material (PCB)	—	—	—	—	FR4
Power					
Current consumption	—	—	—	mA	See the data sheet
Temperature					
Operating temperature (see note)	-40	+25	+70	°C	Operating temperature is limited to +70 °C due to switches. Basic circuit handles a maximum temperature of +85 °C.
Storage temperature	-30	+25	+70	°C	—
RF 802.15.4 frequency range	2405	—	2480	MHz	All 16 channels in the 2450 MHz band
RF BLE frequency range	2400	—	2480	MHz	All 40 channels in the 2450 MHz band

Table 1. FRDM-KW40Z board specifications (continued)

Parameter	Min	Typ	Max	Units	Notes/Conditions
RF ISM and MBAN frequency range	2360	—	2483	MHz	—
RF receiver					
Saturation (maximum input level)	—	+0	—	dBm	See the data sheet
Sensitivity for 1 % packet error rate (PER) (+25 °C) 802.15.4	—	-102	—	dBm	See the data sheet
Sensitivity for 1 % packet error rate (PER) (+25 °C) BLE	—	-91	—	dBm	See the data sheet
RF transmitter					
RF power output	-20	—	+5	dBm	Programmable in steps. At the antenna feed with no harmonic trap.[1]
2nd harmonic	—	≤50	≤40	dBm	See the data sheet
3rd harmonic	—	≤50	≤40	dBm	See the data sheet
Regulatory approval					
FCC	—	—	—	—	Product is approved according to the FCC part 15 Standard.
CE (ETSI)	—	—	—	—	Product is approved according to the EN 300 328 V1.7.1 (2006-10) Standard.
CE (EMC)	—	—	—	—	Product is approved according to the EN 301 489-1 V1.6.1 (2005-09) and EN 301 489-17 V1.2.1 (2002-08) s=Standards.
Safety					
UL	—	—	—	—	Product is approved according to the IEC 60950-1 and EN 60950-1, First Edition Standards.
Environment					
RoHS	—	—	—	—	Product complies with the EU Directive 2002/95/EC of 27 January 2003.
WEEE	—	—	—	—	Product complies with the EU Directive 2002/95/EC of 27 January 2003.

[1] Harmonic trap will add 1-2 dB of loss

4.2 Functional description

The FRDM-KW40Z board is built around Freescale MKW40Z SoC in a 48-pin LGA package. It features an IEEE Std. 802.15.4 and BLE 2.4 GHz radio frequency transceiver and a Kinetis family ultra-low-power, mixed-signal ARM Cortex-M0+ MCU in a single package. This board is intended as a simple evaluation platform and as a building block for application development. The four-layer board provides the MKW40Z SoC with its required RF circuitry, 32 MHz reference oscillator crystal, and power supply with a DC-DC converter including Bypass, Buck, and Boost modes. The layout for this base-level functionality can be used as a reference layout for your target board. This figure shows a simple functional block diagram:

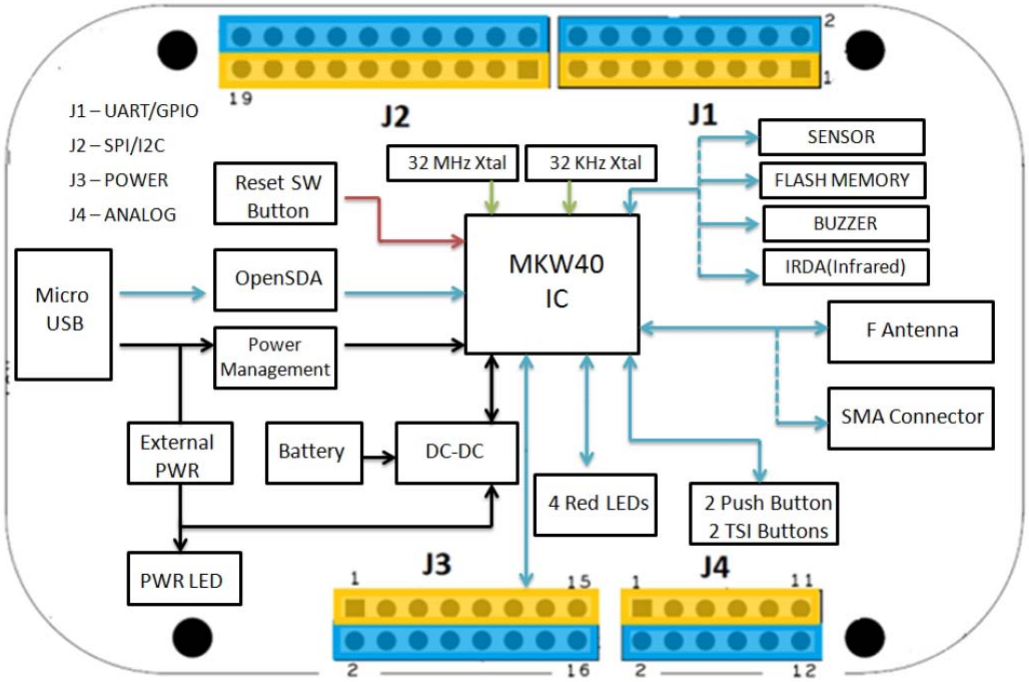

Figure 6. FRDM-KW40Z board functional block diagram

4.2.1 RF performance and considerations

The FRDM-KW40Z board's integrated transceiver includes a 1 mW nominal output power PA with internal Voltage-Controlled Oscillator (VCO), integrated transmit/receive switch, on-board power supply regulation, and full spread-spectrum encoding and decoding. The main specifications of the MKW40Z SoC are:

- Nominal output power is set to 0 dBm.
- Programmable output power ranges from -20 dBm to +5 dBm at the SMA (no harmonic trap).
- Typical sensitivity is -102 dBm (@1 % PER for 25 °C) at the SMA (802.15.4).
- Typical sensitivity is -91 dBm (@1 % PER for 25 °C) at the SMA (BLE).
- Frequency ranges from 2360 to 2480 MHz.
- Differential bidirectional RF input/output port with integrated transmit/receive switch.
- "F" printed-metal antenna for a small-footprint, low-cost design.
- Minimum number of RF marching components and external 50:100 balun.

The external 50 (balanced):100 (unbalanced) balun connects a single-ended 50-Ohm port to the differential RF port of the MKW40Z SoC transceiver. The layout has a provision for out-of-band signal suppression (components L4 and C33), if required. The following figure shows the typical topology of the RF circuitry. The RF connector J5 is provided for conducted measurement purposes, and it is used as DNP.

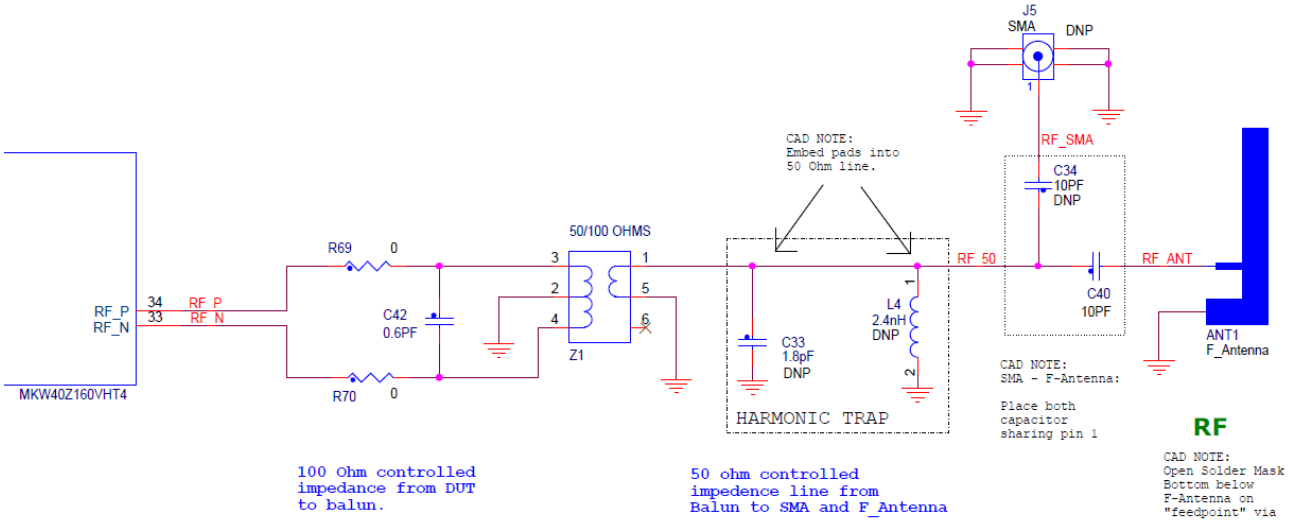

Figure 7. FRDM-KW40Z board's RF circuitry

4.2.2 Clocks

The FRDM-KW40Z board provides two clocks:

- 32 MHz Reference Oscillator—Figure 8 shows the 32 MHz external crystal Y1. This mounted crystal meets the specifications outlined in *Reference Oscillator Crystal Requirements for the MC1320x, MC1321x, MC1322x, and MC1323x IEEE 802.15.4 Devices* (document AN3251). The IEEE Std. 802.15.4 requires the frequency to be accurate to less than ±40 ppm.
  - Capacitors C41 and C42 provide the bulk of the crystal load capacitance. At 25 °C, the frequency must be accurate to ±10 ppm (or less) to enable temperature variation.
  - To measure the 32 MHz oscillator frequency, program the CLKOUT (PTB0) signal to provide buffered output clock signal.
- Optional 32.768 kHz Crystal Oscillator—a secondary 32.768 kHz crystal Y2 is provided (see Figure 9). Use this oscillator for a low-power accurate time base.
  - The module provides the Y2 crystal and its load capacitors C46 and C47.
  - Load capacitors C46 and C47 provide the entire crystal load capacitance; there is no on-board trim capacitance.
  - The 32 kHz oscillator components are supplied, but not enabled. The 0 Ohm resistors R71 and R76 disable the 32 kHz oscillator.

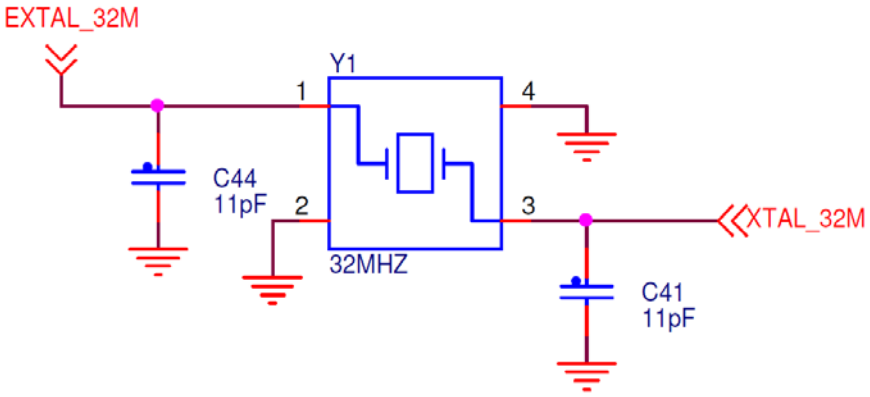

Figure 8. FRDM-KW40Z board's 32 MHz reference oscillator circuit

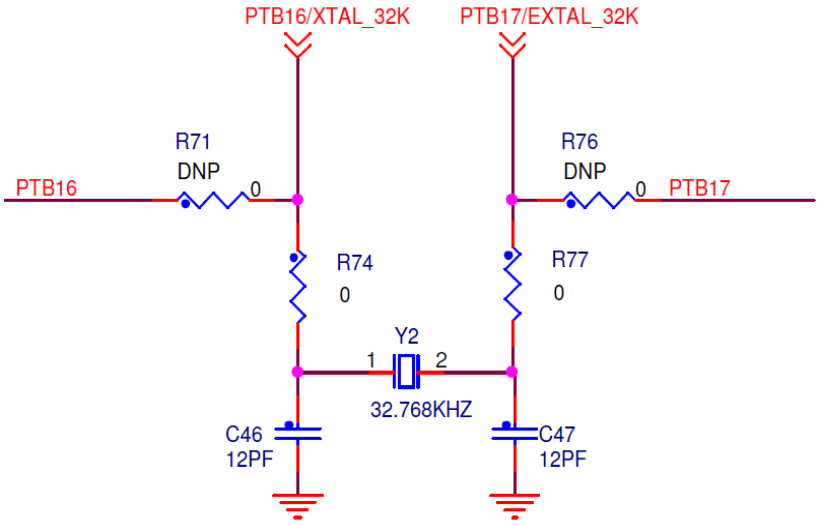

Figure 9. FRDM-KW40Z board's optional 32.768 kHz oscillator circuit

4.2.3 Power management

There are several different ways to power and measure current on the FRDM-KW40Z board. The FRDM-KW40Z power-management circuit is shown in this figure:

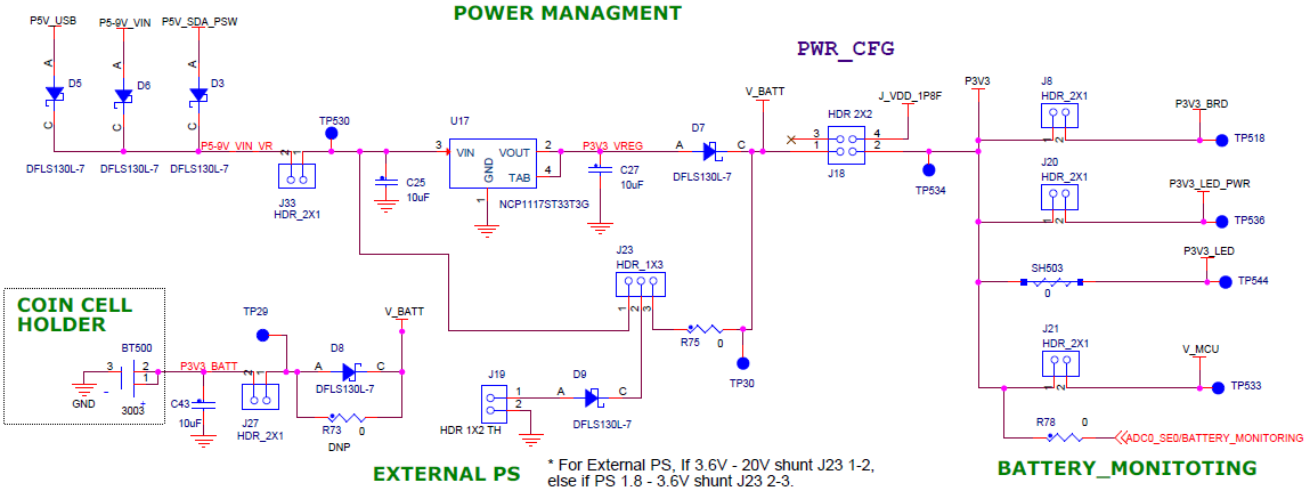

Figure 10. FRDM-KW40Z board's power-management circuit

Power the FRDM-KW40Z in several ways:

- Power the board through the micro USB type B connector (J6), which provides P5V_USB to LDO 3V3 (U17).
- Power the board through the Freedom development board headers, which provide either P3.3V or P5-9V_VIN on header J3 pin-16 to LDO 3V3 (U17).
- Power the board from an external battery (Coincell – BT500).
- Power the board from an external DC supply in these ways:
  - Connect an adapter that can supply 1.8 to 3.6 VDC to J19 pins 1 using the selector J23 pin 2-3.
  - Connect an unregulated external supply (of up to 5.5 VDC) to J19 pin 1 and the GND pin to use the onboard 3.3 V LDO regulator (using the selector J23 pin 1-2).

The 2-pin 1×2 headers J8, J20, and J21 can supply current to various board components and measure the current (if desired). Green LED marked as LED6 is available as a power indicator.

Power headers can supply either the LED, MCU, or peripheral circuits. Measure the current by inserting a current meter in place of a designated jumper. Connection configurations are described in Table 2.

Table 2. Power distribution headers

Supply designation	Header pins	Description
P3V3_BRD J8	1-2	Supply voltage to board peripherals • Normally jumpered • Jumper used to enable sensor, external flash memory, and buzzer on board • Leave open for lowest power • Usage—measure the current or breakout for current consumption
P3V3_LED_PWR J20	1-2	Supply voltage to power LED • Normally jumpered • Jumper used to enable green power LED on board • Leave open for lowest power • Usage—measure the LED current
V_MCU J21	1-2	Supply voltage to MKW40Z SoC • Normally jumpered • Powers the MKW40Z SoC and transceiver • Usage—measure or supply the MCU and radio current

The DC-DC power configuration headers provide the DC-DC modes, and can be easily modified for the desired mode. The connection configurations are described in Table 3:

Table 3. DC-DC power distribution headers

DC-DC mode	Reference designator and header pins	Description
Bypass	J18 1-2 J16 1-2 J17 3-4 J22 1-3, 2-4	Supply voltage to power Bypass mode • Normally jumpered as primary mode • Power level range 1.8 V–3.6 V
Buck	J18 2-4 J16 5-6 J17 3-4 J22 3-5	Supply voltage to power Buck mode • Alternative configuration, related to Coin cell option • Power level range 1.8 V–4.2 V • DC-DC converter requires at least 2.1 V to start; the supply can drop to 1.8 V after the DC-DC converter settles
Buck Auto-Start	J18 2-4 J16 3-4 J17 3-4 J22 3-5	Supply voltage to power Buck Auto-Start mode • Alternative configuration, related to Coin cell option • Power level range 1.8 V–4.2 V • DC-DC converter requires at least 2.1 V to start; the supply can drop to 1.8 V after the DC-DC converter settles
Boost	J18 2-4 J16 3-4 J17 1-2, 5-6 J22 3-5	Supply voltage to power Boost mode • Alternative configuration, related to single battery option • Power level range 0.9 V–1.8 V

NOTE

When configuring the Buck mode, SWD connector does not support J-Link Lite. J-Link BASE is required. It is due to the 1.8 V operating mode.

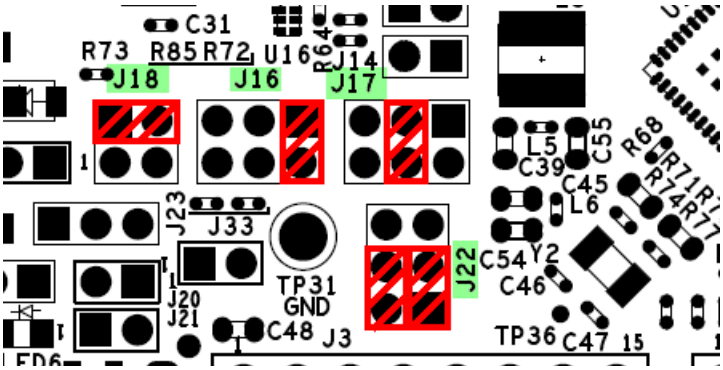

Figure 11. Bypass headers

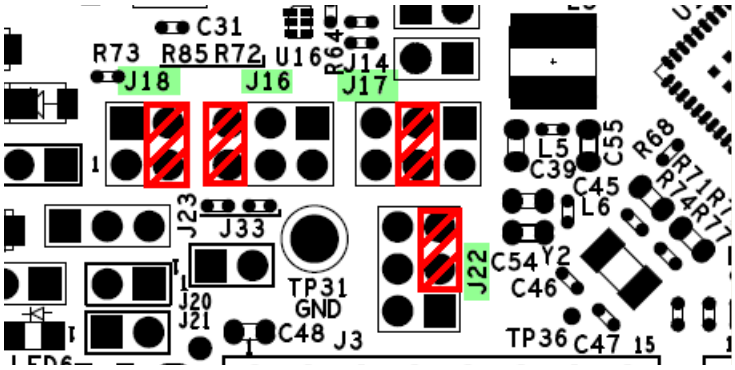

Figure 12. Buck headers

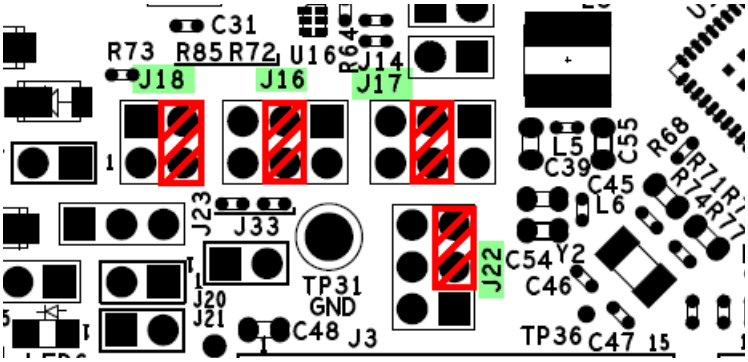

Figure 13. Buck Auto-Start headers

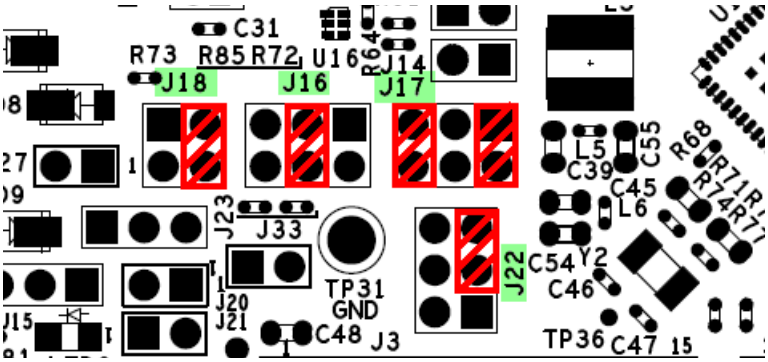

Figure 14. Boost headers

4.2.4 FRDM-KW40Z board peripheral functions

The FRDM-KW40Z development board includes the Freedom development board headers to interface with the general-purpose functions, and to assist in the implementation of target applications.
The FRDM-KW40Z board has alternate port functions routed to those interface headers where you can use the off-board Freedom development platform peripherals.

4.2.4.1 Serial flash memory (SPI interface)

Component U4 is the AT45DB021E 2-Mbit (256 KB) serial flash memory with SPI interface. Use the memory for Over-the-Air Programming (OTAP) for storing the non-volatile system data or parameters. The figure below shows the memory circuit.

- Memory power supply is P3V3_BRD.
- Discrete pullup resistors for the SPI port are included.
- You can share the SPI with other peripherals using the J2 SPI connectors. The normal SPI_SS and the second chip-select must not be active at the same time.
- The SPI Write Protect and Reset have a discrete pullup resistor.

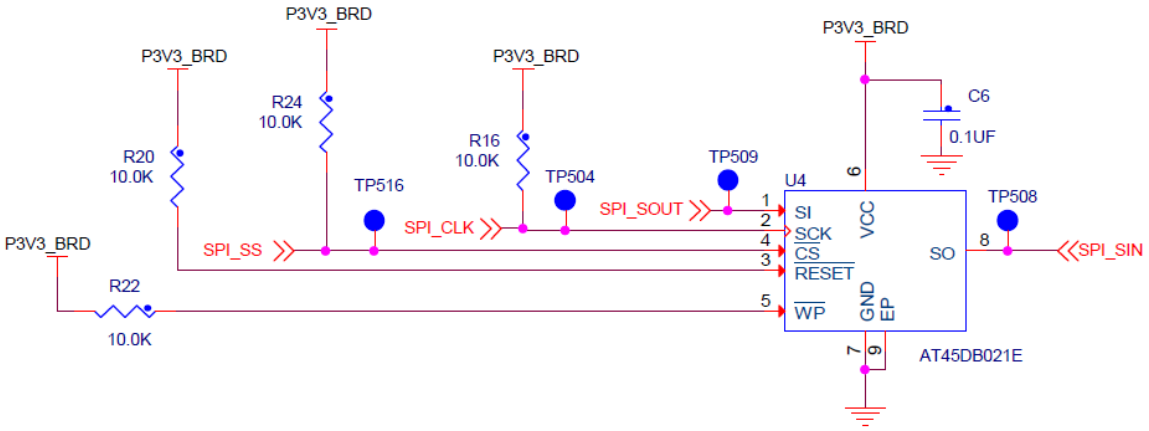

Figure 15. AT45DB021E 2-Mbit (256 KB) serial flash memory circuit

4.2.4.2 Combo sensor (I^2C interface)

Component U9 is Freescale FXOS8700CQ sensor, a six-axis sensor with integrated linear accelerometer and magnetometer, very low power consumption, and selectable I^2C. Figure 16 shows the sensor circuit.

- The sensor power supply is P3V3_BRD.
- Discrete pullup resistors for the I^2C port are provided.
- There is one interruption signal.
- The I^2C can be shared with other peripherals through the J4 pin 10 and pin 12 (I^2C1 connectors).

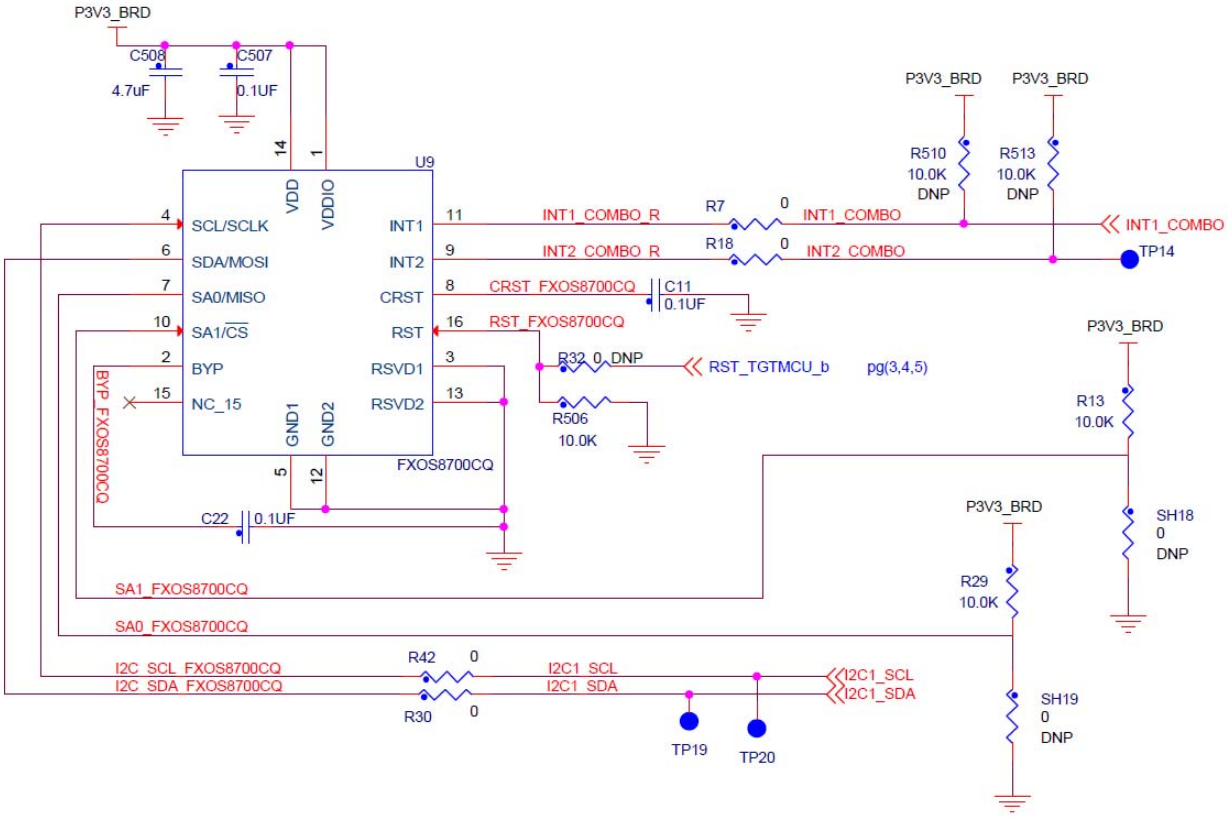

Figure 16. FXOS8700CQ combo sensor circuit

4.2.4.3 Buzzer

Component BZ500 is is a piezoelectric transducer (MPN: AST1109MLTRQ). Use the buzzer for sound applications. Figure 17 shows the buzzer circuit. PWM signal is required to enable the buzzer.

- The buzzer power supply is P3V3_BRD.
- The resonant frequency is 4.0 kHz.
- Buzzer is driven by Q1 and MCU output PTB3 signal.
- The driven signal can be shared with other peripherals through the J1 pin 16.

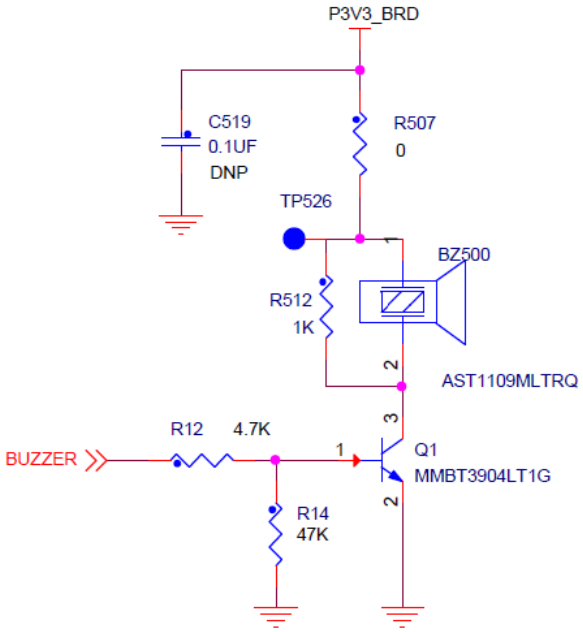

Figure 17. Buzzer circuit

4.2.4.4 Potentiometer (ADC interface)

Use the 5 kΩ potentiometer (R67) for ADC verification and applications. Figure 18 shows the potentiometer circuit.

- The POT power supply can be either the P3V3 or V_BATT for the input source.
- A single-turn potentiometer is provided.
- Signal is routed through ADC0_SE.
- The ADC trace can be shared with other peripherals through the J4 pin 3.

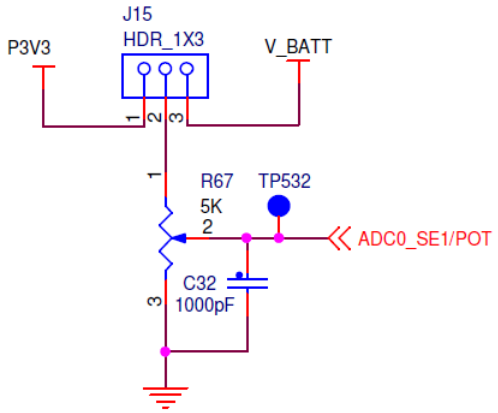

Figure 18. Potentiometer circuit

NOTE

To measure the POT value, program the ADC in differential mode.
The V_BATT is taken as the differential input.

4.2.4.5 IR transmitter (CMT interface)

An infrared transmitter or blaster is provided to control the IR. Figure 19 shows the IR circuit.

- The IR power supply is P3V3_LED.
- The IR has a range of approximately 10 meters.
- The current draw is approximately 100 mA when active.
- When using the blaster as an application, assure the proper orientation.

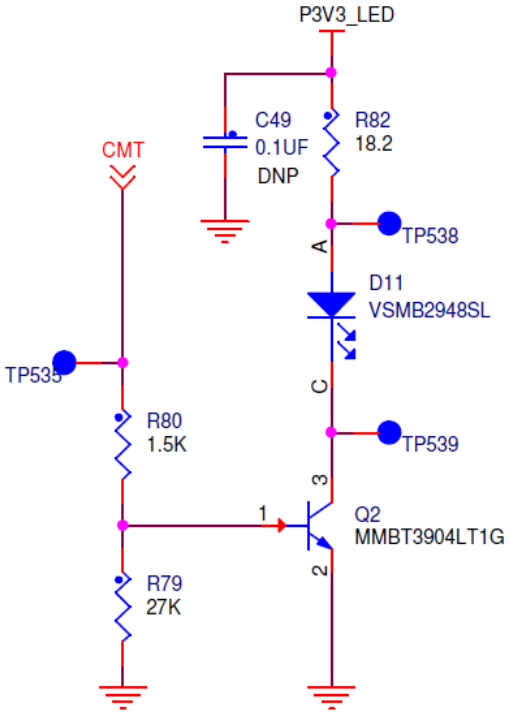

Figure 19. IR transmitter circuit

4.2.4.6 Interface connectors J1, J2, J3, and J4

The four connectors (J1, J2, J3, and J4) are 100-mil pin headers mounted on the front (component side), supporting the standard Freedom connector.

- P3V3, P5V_USB, and P5-9V_VIN provide the supply voltage for the headers connector.
  - The I/O power supply for the FRDM-KW40Z board and the power supply for the MKW40Z SoC must use the same voltage to avoid potential damage.

The pin definitions for the headers are shown in Table 4 and Table 5, respectively.

Table 4. J1 and J2 connectors

Header pin no.	J1	Description	Header pin no.	J2	Description
	MKW40Z pin name			MKW40Z pin name	
1	NC	NC	1	NC	NC
2	UART0_RX_TGTMCU	PTC6 (D0/Rx/int)	2	SWD_DIO_TGTMCU	PTA0 (D8/Int)
3	NC	NC	3	NC	NC
4	UART0_TX_TGTMCU	PTC7 (D1/Tx/int)	4	KW40_SWD_CLK	PTA1 (D9/Int)
5	NC	NC	5	NC	NC
6	ELEC_IN1	PTA16 (D2/int)	6	SPI_SS	PTC19 (D10/SPI_SS)
7	NC	NC	7	NC	NC
8	ELEC_IN2	PTA17 (D3/PWM/int)	8	SPI_SIN	PTC18 (D11/MOSI)
9	NC	NC	9	NC	NC
10	SW4	PTA19 (D4/int)	10	SPI_SOUT	PTC17 (D12/MISO)
11	NC	NC	11	NC	NC
12	SW3	PTA18 (D5/PWM/int)	12	SPI_CLK	PTC16 (D13/SCK)
13	NC	NC	13	NC	NC
14	INT1_COMBO	PTB2 (D6/PWM/Int)	14	GND	VSS (GND) board ground
15	NC	NC	15	NC	NC
16	BUZZER	PTB3 (D7/CMP/int)	16	P3V3	VREF
—	—	—	17	NC	NC
—	—	—	18	PTC1	PTC1 (D14/Ana/Int)
—	—	—	19	NC	NC
—	—	—	20	PTC0	PTC0 (D15/Ana/Int)

Table 5. J3 and J4 connectors

Header pin no.	J3	Description	Header pin no.	J4	Description
	MKW40Z pin name			MKW40Z pin name	
1	NC	NC	1	ADC_SE0/BATTERY_ MONITORING	ADC0_SE0
2	PTC4	EXTRG_IN	2	PTB17	PTB17/XTAL32k/I2C_SDA
3	NC	NC	3	ADC0_SE1/POT	ADC0_DM0/CMPO_IN1
4	P3V3	IO_REF	4	PTB16	PTB16/EXTAL32k/I2C_SCL
5	NC	NC	5	NC	NC
6	RST_TGTMCU_b	RESET	6	CMT	PTB1/TSI_CH15/CMT_IRO
7	NC	NC	7	NC	NC
8	P3V3	V_OUT	8	PTC5	PTC5/TSI_CH1
9	NC	NC	9	COM	PTB0/CLKOUT
10	P5V_USB	5V	10	I2C1_SDA	PTC3/I2C1_SDA
11	NC	NC	11	PTB18	PTB18/CMP0_IN2
12	GND	GND	12	I2C1_SCL	PTC2/I2C1_SCL
13	NC	NC	—	—	—
14	GND	GND	—	—	—
15	NC	NC	—	—	—
16	P5-9V_VIN	Unregulated Voltage	—	—	—

4.3 Schematic, board layout, and bill of materials

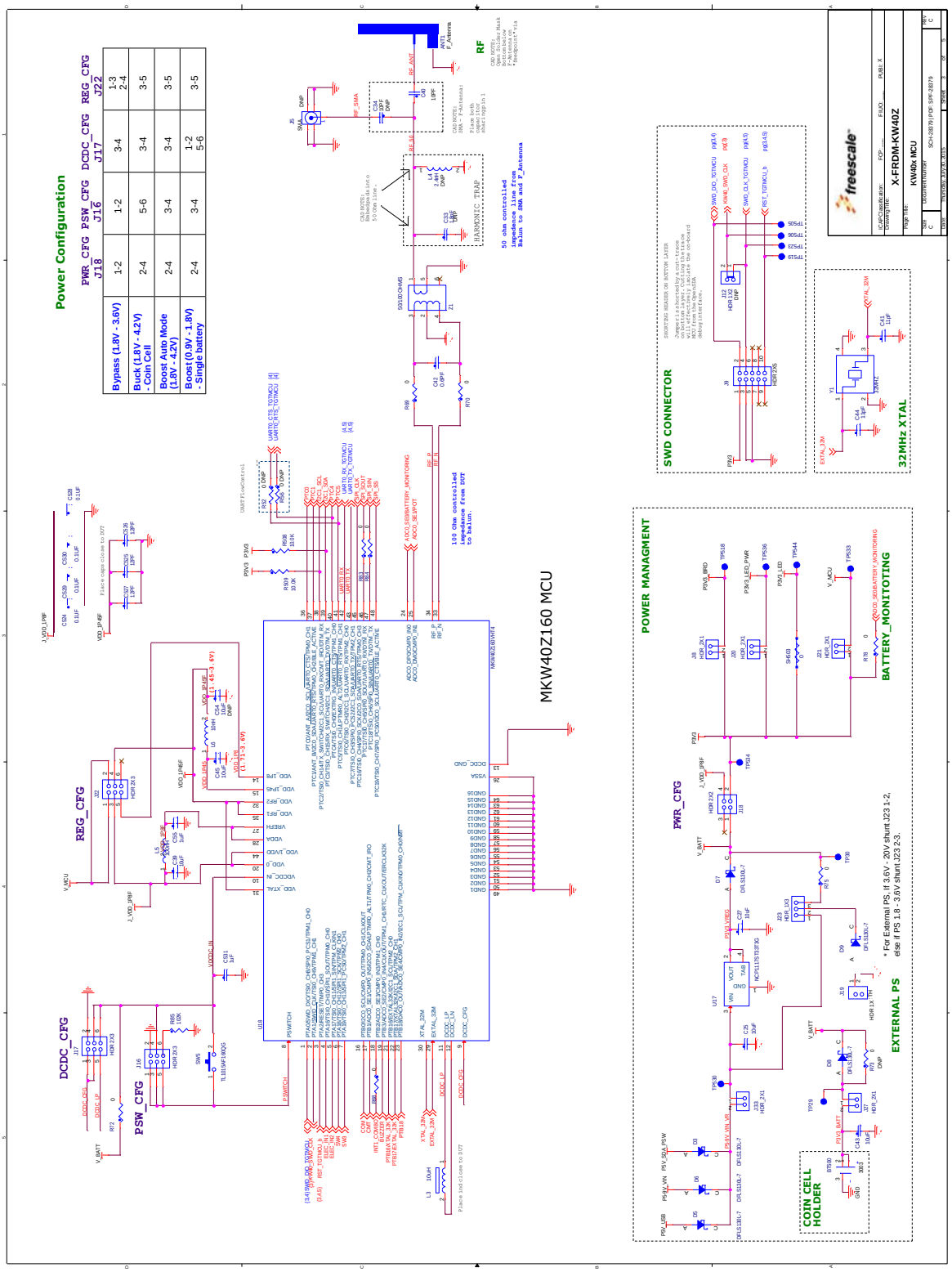

Figure 20. FRDM-KW40Z board schematic rev. C (sheet 1 of 3)

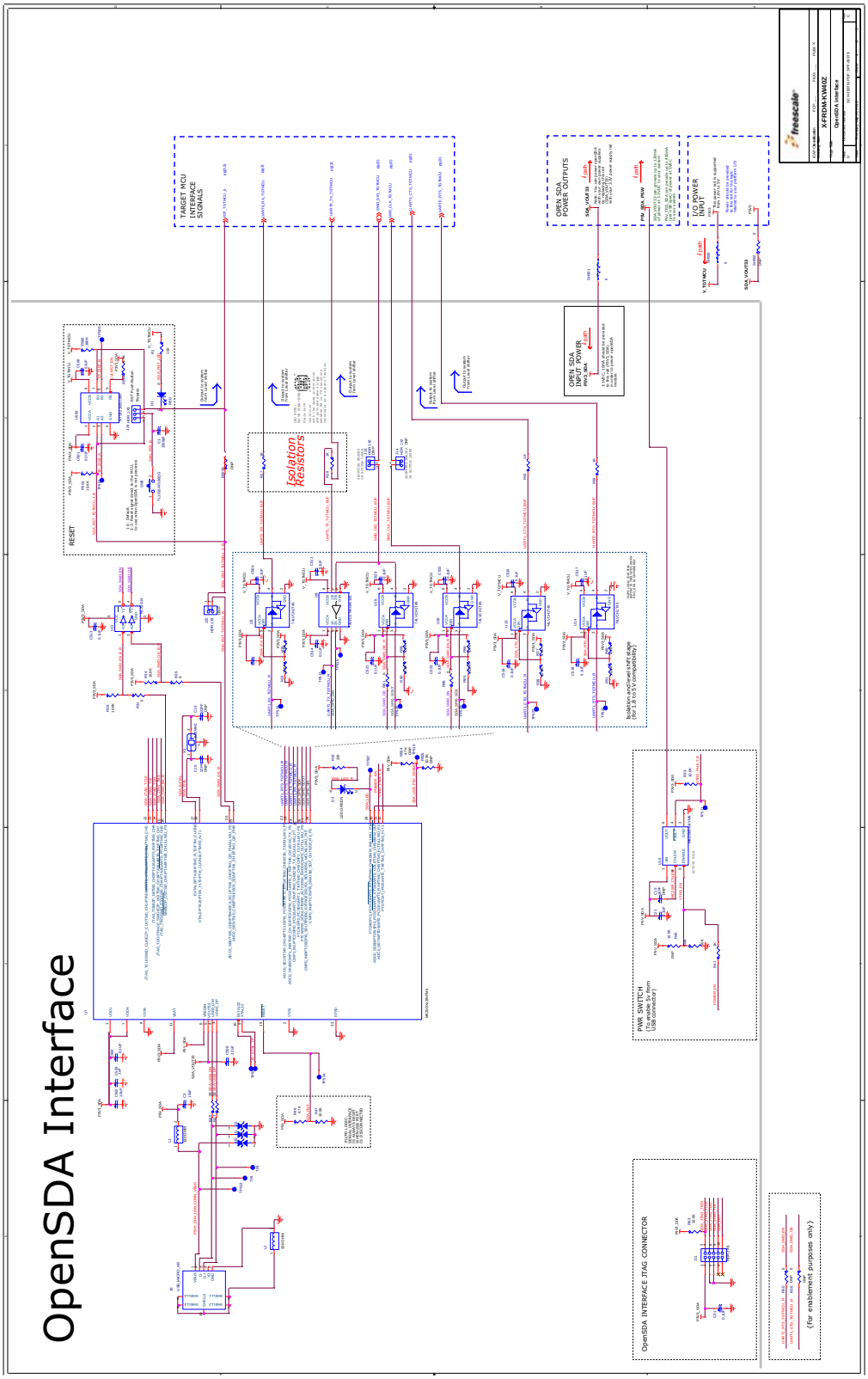

Figure 21. FRDM-KW40Z board schematic rev. C (sheet 2 of 3)

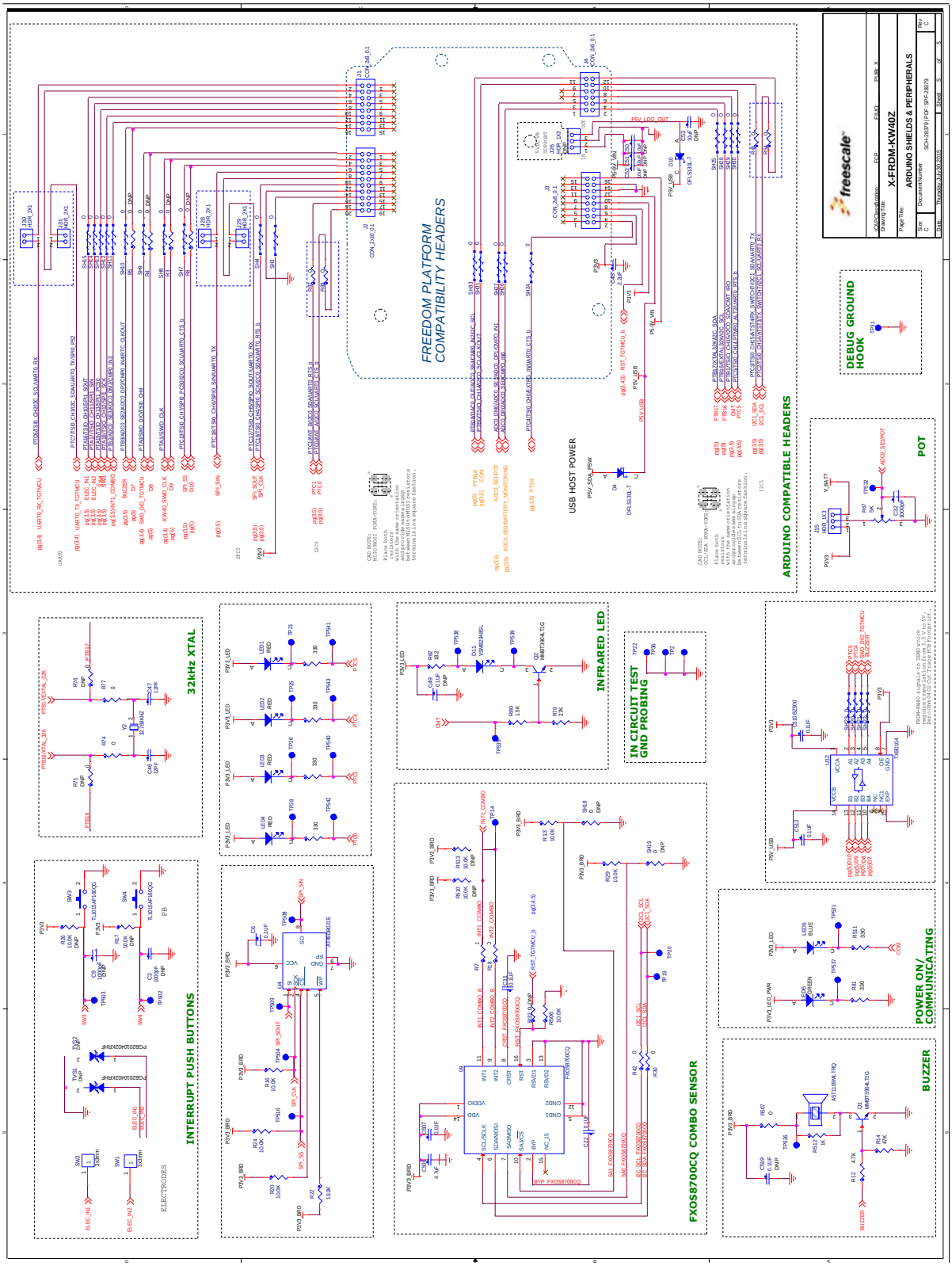

Figure 22. FRDM-KW40Z board schematic rev. C (sheet 3 of 3)

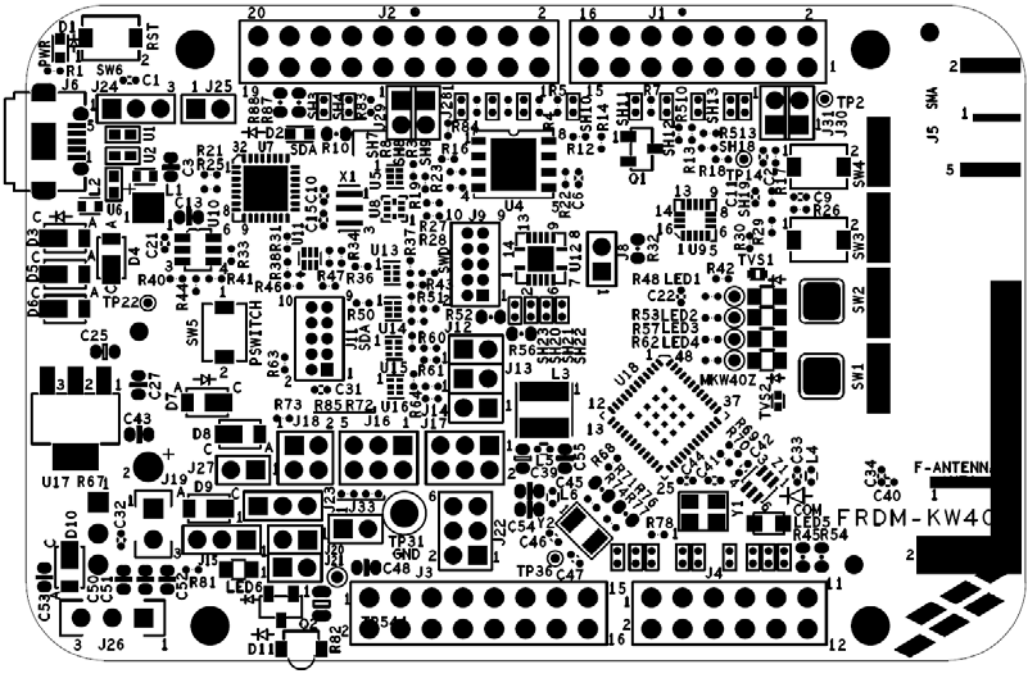

Figure 23. FRDM-KW40Z development board component location (top view)

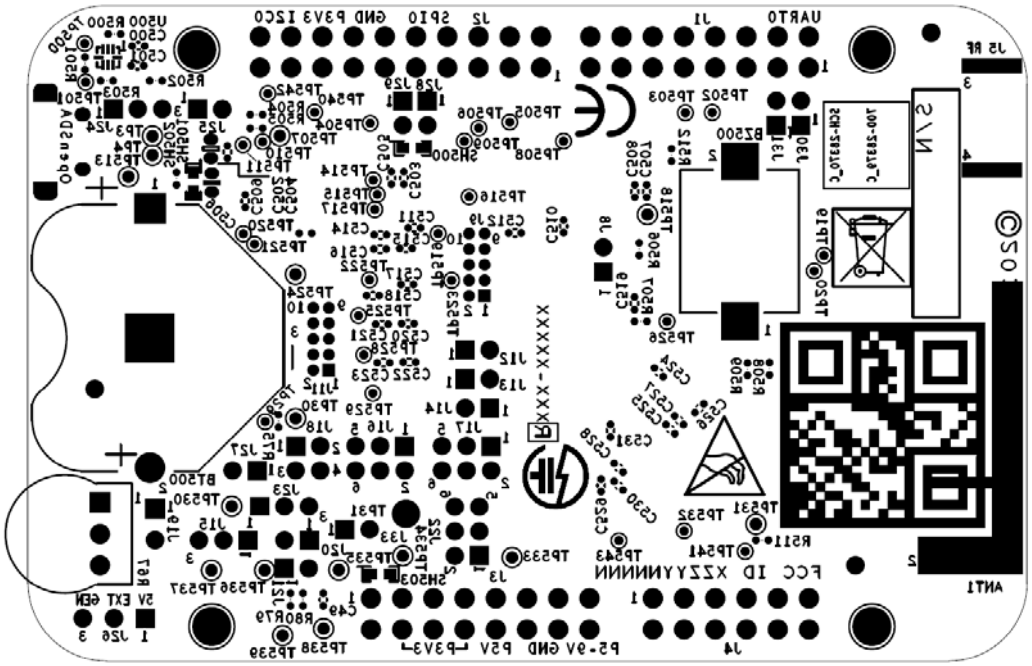

Figure 24. FRDM-KW40Z development board test points

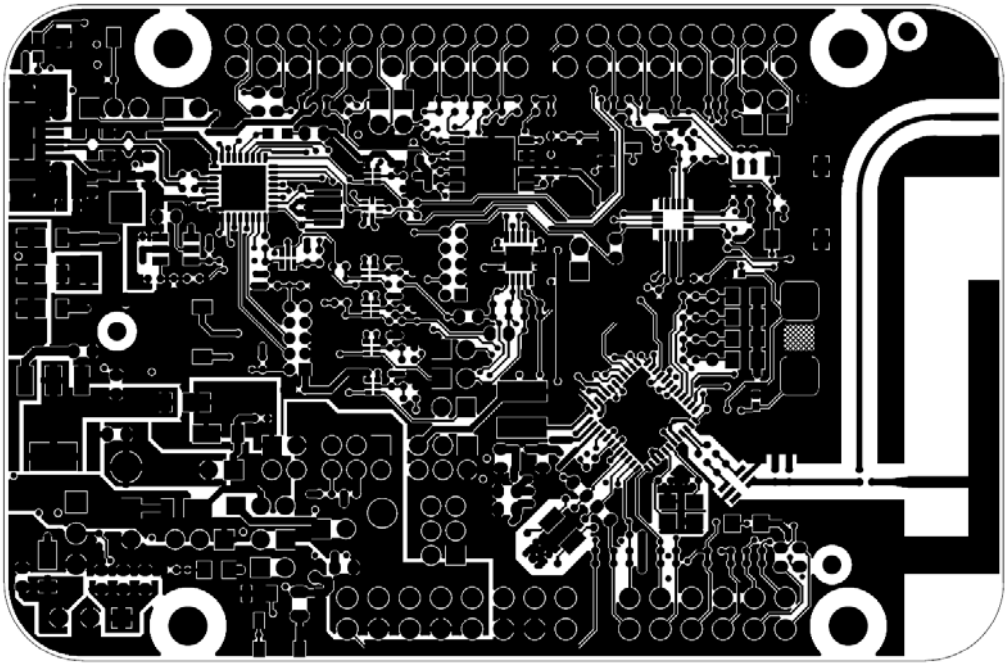

Figure 25. FRDM-KW40Z development board layout (top view)

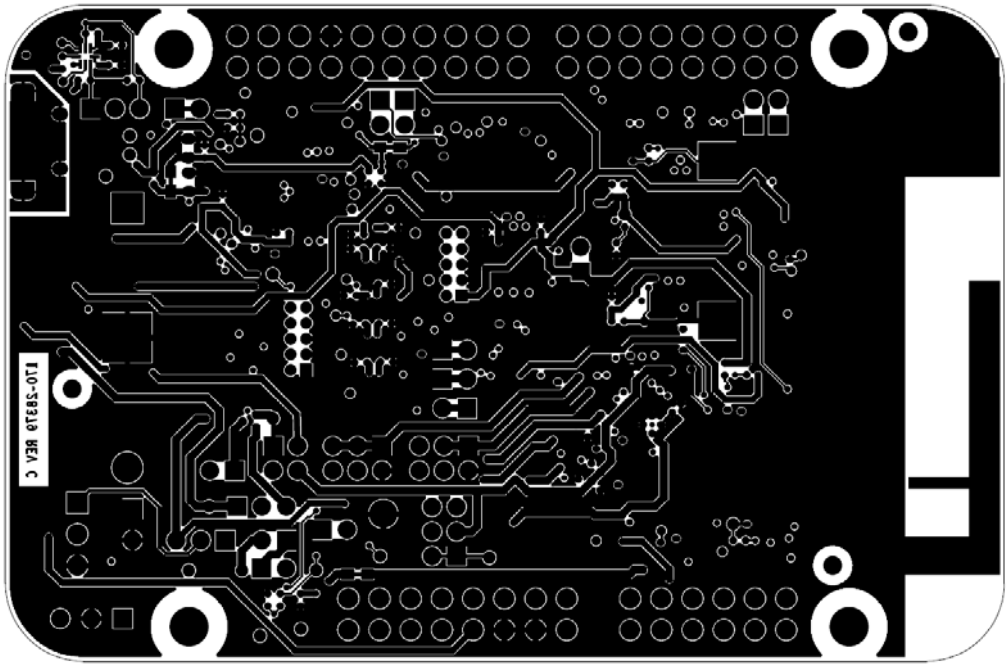

Figure 26. FRDM-KW40Z development board layout (bottom view)

4.3.1 Bill of materials

Table 6. Bill of materials (common parts for all frequency bands) (Sheet 1 of 5)

Item	Qty	Reference	Value	Description	Mfg. name	Mfg. part number
1	1	ANT1	F_Antenna	PCB F ANTENNA, NO PART ORDER	—	—
2	1	BT500	3003	HOLDER BATTERY 20MM DIA TH	Keystone Electronics	3003
3	1	BZ500	AST1109MLTRQ	AUDIO DEVICE BZR PIEZO 4.1 KHZ 73DB 1-20V SMT	MALLORY	AST1109MLTRQ
4	2	C1,C32	1000pF	CAP CER 1000PF 50V 5% C0G 0402	MURATA	GRM1555C1H102JA01D
5	2	C2,C9 DNP	1000pF	CAP CER 1000PF 50V 5% C0G 0402	MURATA	GRM1555C1H102JA01D
6	7	C3,C25,C27, C39,C43,C45,C502	10uF	CAP CER 10uF 16V 20% X5R 0603	TAIYO YUDEN	EMK107BBJ106MA-T
7	28	C6,C11,C21, C22,C31,C500,C501,C503, C504,C505, C507,C510, C511,C512, C513,C514, C515,C516, C517,C518, C520,C521, C522,C523, C524,C528, C529,C530	0.1UF	CAP CER 0.1UF 10V 10% X5R 0402	KEMET	C0402C104K8PAC
8	2	C10,C15 DNP	22PF	CAP CER 22PF 50V 5% C0G 0402	AVX	04025A220JAT2A
9	1	C13 DNP	18PF	CAP CER 18PF 50V 5% C0G 0603	YAGEO AMERICA	CC0603JRNPO9BN180
10	1	C33 DNP	1.8pF	CAP CER 1.8PF 50V 0.25PF C0G 0402	MURATA	GRM1555C1H1R8CA01D
11	1	C34 DNP	10PF	CAP CER 10PF 50V 5% C0G 040210PF	AVX	04025A100JAT2A
12	1	C40	10PF	CAP CER 10PF 50V 5% C0G 040210PF	AVX	04025A100JAT2A
13	2	C41,C44	11pF	CAP CER 11pF 50V 1% C0G 0402	AVX	04025U110FAT2A
14	1	C42	0.6PF	CAP CER 0.6PF 50V +/-0.25PF C0G 0402	MURATA	GRM1555C1HR60CZ01
15	5	C46,C47,C525, C526,C527	12PF	CAP CER 12PF 50V 5% C0G 0402	MURATA	GRM1555C1H120JZ01D
16	2	C48,C506	2.2UF	CAP CER 2.2uF 25V 10% X5R 0603	TDK	C1608X5R1E225K
17	2	C49,C519 DNP	0.1UF	CAP CER 0.1UF 10V 10% X5R 0402	KEMET	C0402C104K8PAC
18	5	C50,C51,C52, C53, C54 DNP	10uF	CAP CER 10UF 10V 20% X5R 0603	TAIYO YUDEN	LMK107BJ106MALTD
19	1	C55	1uF	CAP CER 1uF 16V 10% X5R 0603	TAIYO YUDEN	EMK107BJ105KA-T
20	1	C508	4.7uF	CAP CER 4.7UF 6.3V 20% X5R 0402	VENKEL COMPANY	C0402X5R6R3-475MNP
21	2	C509, C531	1.0UF	CAP CER 1.0UF 10V 10% X5R 0402	YAGEO AMERICA	CC0402KRX5R6BB105
22	1	D1	RED	LED ULTRA BRIGHT RED SGL 30MA 0603	LITE ON	LTST-C190KRKT
23	1	D2	LED GREEN	LED GRN SGL 20MA 0603	OSRAM	LG L29K-G2J1-24-Z
24	8	D3,D4,D5,D6, D7,D8,D9,D10	DFLS130L-7	DIODE SCH 1A 30V PowerDI123	DIODES INC	DFLS130L-7

Table 6. Bill of materials (common parts for all frequency bands) (Sheet 2 of 5)

Item	Qty	Reference	Value	Description	Mfg. name	Mfg. part number
25	1	D11	VSMB2948SL	LED IR RA 100mA 1.35V 940NM SMD	VISHAY INTERTECHNOLOGY	VSMB2948SL
26	1	J2	CON_2x10	CON 2x10 FEMALE 100MIL SP 335H 394LL AU	MTCONN	JT254F-D180-850-210-10D
27	2	J1,J3	CON_2X8	CON 2x8 FEMALE 100MIL SP 335H 394LL AU	MTCONN	JT254F-D180-850-208-10D
28	9	J8,J20,J21,J27,J28,J29,J30,J31,J33	HDR 1X2	HDR 1X2 TH 2MM SP 217H AU 110L	SAMTEC	TMM-102-02-G-S
29	1	J5 DNP	SMA	CON, SMA, EDGE 0.062IN, 50 Ω FEMALE 18 GHZ	EMERSON CONNECTIVITY	142-0701-851
30	1	J6	USB_MICRO_AB	CON 5 USB_MICRO_AB_RECEPTACLE RA SKT SMT 0.65MM SP 122H AU	MOLEX	475900001
31	2	J9, J11	HDR 2X5	HDR 2X5 TH 50MIL CTR 167H AU 91L	ANYTRONIC	0922S0205011N6T-2LF
32	1	J12 DNP	HDR 1X2	HDR 1X2 TH 2MM SP 217H AU 110L	SAMTEC	TMM-102-02-G-S
33	3	J13,J14,J25 DNP	HDR 1X2	HDR 1X2 TH 2MM SP 217H AU 110L, NO PART TO ORDER	—	—
34	3	J15,J23,J24	HDR_1X3	HDR 1X3 TH 2MM SP 217H AU 110L	SAMTEC	TMM-103-02-G-S
35	3	J16,J17,J22	HDR 2X3	HDR 2X3 TH 2MM CTR 217H AU 110L	SAMTEC	TMM-103-02-G-D
36	1	J18	HDR 2X2	HDR 2X2 TH 2MM CTR 217H AU 110L	SAMTEC	TMM-102-02-G-D
37	1	J19	HDR 1X2 TH	HDR 1X2 TH 100MIL SP 339H AU 98L	SAMTEC	TSW-102-07-G-S
38	1	J4	CON_2X6	CON 2x6 FEMALE 100MIL SP 335H 394LL AU	MTCONN	JT254F-D180-850-206-10D
39	1	J26 DNP	HDR_1X3	HDR 1X3 TH 100MIL SP 330H AU 98L	SAMTEC	HTSW-103-07-S-S
40	4	LED1,LED2, LED3,LED4	RED	LED RED CLEAR SGL 30MA SMT 0805	LITE ON	LTST-C171KRKT
41	1	LED5	BLUE	LED BLUE SGL 20MA SMT 0805	LITE ON	LTST-C171TBKT
42	1	LED6	GREEN	LED GRN SGL 30MA SMT 0805	LITE ON	LTST-C171KGKT
43	2	**L1,L2**	330 W	IND FER BEAD 330Ω@100MHZ 1.7A 0603	TDK	MPZ1608S331A
44	1	L3	10uH	IND WW FER 10uH@1MHz 0.99A 20% 4012	TDK	VLS4012ET-100M
45	1	L4 DNP	2.4nH	IND—0.0024UH@100MHZ 300MA 0.0003UH 0402	MURATA	LQG15HN2N4S02D
46	1	L5	100 nH	IND -- 0.1uH@100MHZ 200MA 5% 0402	TDK	MLG1005SR10JT000
47	1	L6	10nH	IND—0.010uH@100MHZ 350MA 5% 0402	TDK	MLK1005S10NJT000
48	2	Q1,Q2	MMBT3904LT1G	TRAN NPN GEN 200MA 40V SOT-23	ON SEMICONDUCTOR	MMBT3904LT1G
49	1	R1	100	RES MF 100 Ω 1/16W 5% 0402	VENKEL COMPANY	CR040216W101JT
50	11	R3,R4,R5,R8, R36,R50,R73, R502,SH18, SH19,SH502 DNP	0	RES MF ZERO OHM 1/16W 5% 0402	ROHM	MCR01MZPJ000

Table 6. Bill of materials (common parts for all frequency bands) (Sheet 3 of 5)

Item	Qty	Reference	Value	Description	Mfg. name	Mfg. part number
51	19	R7,R18,R30, R31,R35,R42, R61,R66,R68, R69,R70,R72, R74,R75,R77, R78,R83,R84, R507	0	RES MF ZERO OHM 1/16W 5% 0402	ROHM	MCR01MZPJ000
52	1	R10	220	RES MF 220 Ω 1/10W 5% 0603	KOA SPEER	RK73B1JTTD221J
53	8	R12,R19,R37, R46,R49,R59, R64,R501	4.7K	RES MF 4.7K 1/16W 5% 0402	YAGEO AMERICA	RC0402JR-074K7L
54	1	R14	47K	RES MF 47K 1/16W 5% 0402	VENKEL COMPANY	CR0402-16W-473JT
55	20	R13,R16,R20, R22,R23,R24, R29,R33,R34, R38,R39,R47, R51,R60,R63, R65,R503,R506, R508,R509	10.0K	RES MF 10.0K 1/16W 1% AEC-Q200 0402	VISHAY INTERTECHNOLOGY	CRCW040210K0FKED
56	6	R17,R26,R40, R505, R510, R513 DNP	10.0K	RES MF 10.0K 1/16W 1% AEC-Q200 0402	VISHAY INTERTECHNOLOGY	CRCW040210K0FKED
57	2	R21,R25	33	RES MF 33.0 Ω 1/16W 1% 0402	THYE MING TECH CO LTD	CR-02FL6---33R
58	6	R27,R28,R41, R43,R55,R512	1K	RES MF 1.0K 1/16W 5% 0402	VISHAY INTERTECHNOLOGY	CRCW04021K00JNED
59	5	R32,R52,R56, R71,R76 DNP	0	RES MF ZERO OHM 1/10W—0603	VISHAY INTERTECHNOLOGY	CRCW06030000Z0EA
60	1	R44	15K	RES MF 15K 1/16W 1% 0402	KOA SPEER	RK73H1ETTP1502F
61	4	R45,R54,R87,R88	0	RES MF ZERO OHM 1/10W -- AEC-Q200 0603	VISHAY INTERTECHNOLOGY	CRCW06030000Z0EA
62	6	R48,R53,R57, R62,R81,R511	330	RES MF 330 Ω 1/16W 5% 0402	VISHAY INTERTECHNOLOGY	CRCW0402330RJNED
63	1	R67	5K	RES POT 5.0K 1/4W 20% SMT	—	—
64	1	R79	27k	RES MF 27K 1/16W 5% 0402	VISHAY INTERTECHNOLOGY	CRCW040227K0JNED
65	1	R80	1.5K	RES MF 1.5K 1/16W 5% 0402	VISHAY INTERTECHNOLOGY	CRCW04021K50JNED
66	1	R82	18.2	RES MF 18.2 Ω 1/4W 1% 0805	ROHM	ESR10EZPF18R2
67	1	R500	180K	RES MF 180K 1/16W 1% 0402	KOA SPEER	RK73H1ETTP1803F
68	1	R504 DNP	4.7K	RES MF 4.7K 1/16W 5% 0402	YAGEO AMERICA	RC0402JR-074K7L
69	1	R85	102K	RES MF 102K 1/16W 1% 0402	KOA SPEER	RK73H1ETTP1023F
70	24	SH3,SH4,SH7, SH8,SH9,SH10, SH11,SH12,SH13, SH14,SH15, SH20,SH21, SH22,SH23, SH24,SH25, SH26,SH27, SH28,SH29, SH30,SH31,SH33	0	ZERO OHM CUT TRACE 0402 PADS; NO PART TO ORDER	—	—

Table 6. Bill of materials (common parts for all frequency bands) (Sheet 4 of 5)

Item	Qty	Reference	Value	Description	Mfg. name	Mfg. part number
71	3	SH500,SH501, SH503	0	ZERO OHM CUT TRACE 0603 PADS; NO PART TO ORDER	—	—
72	4	SW3,SW4,SW5, SW6	TL1015AF160 QG	SW SPST PB 50MA 12V SMT	E SWITCH	TL1015AF160QG
73	2	SW1,SW2	3x3mm	CAPACITIVE SINGLE ELECTRODE 3X3MM SQUARED ROUNDED CORNERS (NOT A PART TO ORDER)	—	—
74	36	TP2,TP3,TP4, TP14,TP19, TP20,TP22, TP29,TP30, TP36, TP500-534, TP536, TP540-543	TPAD_030	TEST POINT PAD 30MIL DIA SMT, NO PART TO ORDER	—	—
75	21	TP3,TP4,TP21, TP25,TP26,TP28, TP30,TP507, TP513,TP518, TP524,TP530, TP531,TP533, TP534,TP535, TP536,TP537, TP538,TP539, TP544	TPAD_040	TEST POINT PAD 40MIL DIA SMT, NO PART TO ORDER	—	—
76	1	TP31	TESTLOOP_ BLACK	TEST POINT PC MULTI PURPOSE BLK TH	KEYSTONE ELECTRONICS	5011
77	2	TVS1,TVS2 DNP	PGB2010402 KRHF	DIODE ESD SUPPRESSOR BIDIR—12V 0402	LITTELFUSE	PGB2010402KRHF
78	3	U1,U2,U6	0402ESDA-M LP	DIODE TVS BIDIR—30V 0402	COOPER BUSSMANN	0402ESDA-MLP1
79	1	U4	AT45DB021E	IC MEM SPI SERIAL 2MBIT FLASH 85MHZ 1.65-3.6V UDFN8	ADESTO TECHNOLOGIES	AT45DB021E-MHN2B-T
80	5	U5,U13,U14, U15,U16	74LVCH1T45	IC XCVR 1BIT 3-STATE DUAL 1.2–5.5V XSON6	NXP SEMICONDUCTORS	74LVCH1T45GM,132
81	1	U7	MK20DX128V FM5	IC MCU FLASH 128KB 50MHZ 1.71–3.6V QFN32	FREESCALE SEMICONDUCTOR	MK20DX128VFM5
82	1	U8	74LVC2T45G M,125	IC XCVR DUAL SUPPLY 1.2–5.5V XQFN8	NXP SEMICONDUCTORS	74LVC2T45GM,125
83	1	U9	FXOS8700CQ	IC ACCELEROMETER AND MAGNETOMETER SENSOR 3-AXIS 2.5V QFN16	FREESCALE SEMICONDUCTOR	FXOS8700CQ
84	1	U10	MIC2005-0.8Y M6	IC LIN SW PWR 0.8A 2.5-5.5V SOT23-6	MICREL	MIC2005-0.8YM6
85	1	U11	NLX2G14	IC INV DUAL SCHMITT TRIGGER 1.65-5.5V ULLGA6	On Semiconductor	NLX2G14AMX1TCG
86	1	U12	TXB0104	IC VXLTR 4BIT BIDIRECTIONAL 1.2-3.6V/1.65-5.5V QFN14	TEXAS INSTRUMENTS	TXB0104RGYRG4
87	1	U17	NCP1117ST3 3T3G	IC VREG LDO 1A 3.3V SOT223	ON Semiconductor	NCP1117ST33T3G
88	1	U18	MKW40Z160V HT4	IC MCU XCVR 2.4GHZ BLUETOOTH LOW ENERGY MAPLGA64	FREESCALE SEMICONDUCTOR	MKW40Z160VHT4

Table 6. Bill of materials (common parts for all frequency bands) (Sheet 5 of 5)

Item	Qty	Reference	Value	Description	Mfg. name	Mfg. part number
89	1	U500	NTSX2102GU8H	IC DUAL SUPPLY XCVR 50 MBPS 5.5V XQFN8	NXP Semiconductors	NTSX2102GU8H
90	1	X1	8.00MHZ	XTAL 8.00MHZ RSN CERAMIC—SMT	MURATA	CSTCE8M00G55-R0
91	1	Y1	32MHZ	XTAL 32MHZ 9PF—SMT 3.2X2.5MM	NDK	EXS00A-CS02368
92	1	Y2	32.768KHZ	XTAL 32.768 KHZ SMT ROHS COMPLIANT	EPSON ELECTRONICS	FC-135 32.7680KA-A3
93	1	Z1	50/100 W	XFMR BALUN 2.45GHZ ±50MHZ 50/100 Ω 3W SMT	JOHANSON TECHNOLOGY	2450BL15B100_

5 PCB manufacturing specifications

This section provides the specifications used to manufacture the FRDM-KW40Z development Printed Circuit Board (PCB) described in this guide.

The FRDM-KW40Z development boards must comply with the following:

- The PCB must comply with Perfag1D/3C (www.perfag.dk/en/).
- The PCB manufacturer's logo is required.
- The PCB production week and year code is required.
  - The manufacturer's logo and week/year code must be stamped on the back of the PCB solder mask.
  - The PCB manufacturer must not insert text on the PCB either in copper or in silkscreen without written permission from Freescale Semiconductor, Inc.
- The required Underwriter's Laboratory (UL) Flammability Rating:
  - The level is 94V-0 (http://ulstandards.ul.com/standard/?id=94).
  - The UL information must be stamped on the back of the PCB solder mask.

NOTE

- A complete set of design files for the MKW40Z development boards is available at the Freescale website (www.freescale.com/KW40Z) under the "Software and Tools" tab. Use the reference designs as a starting point for custom applications.
- The *Freescale IEEE 802.15.4/ZigBee Package and Hardware Layout Considerations Reference Manual* (document ZHDCRM) is also available at the same website to provide additional design guidance.

5.1 Single PCB construction

This section describes individual PCB construction details.

- The FRDM-KW40Z PCBs are four-layer, multi-layer designs.
- The FRDM-KW40Z PCBs must contain no blind, buried, or micro vias.
- PCB data:
  - FRDM-KW40Z board size must be approximately 81 × 53 mm (3.20 × 2.10 inches).
  - FRDM-KW40Z board final thickness (Cu/Cu) must be 1.57 mm (0.62 inches) ±10 % (excluding solder mask).

The following table defines some of the layers of the complete PCB. The artwork identification refers to the name of the layer in commonly used terms.

Table 7. FRDM-KW40Z layer by layer overview

Layer	Artwork identification	File name
1	Silkscreen Top	PSS.art
2	Top Layer Metal	L1_PS.art
3	Ground Layer	L2_GND.art
4	Signal Layer	L3_INT_1.art
5	Bottom Layer Metal	L4_SS.art
6	Silkscreen Bottom	SSS.art

CAUTION

The FRDM-KW40Z development board contains high-frequency 2.4 GHz RF circuitry. As a result, RF component placement, line geometries and layout, and spacing to the ground plane are critical parameters. Board stackup geometry is critical. Dielectric and copper thicknesses and spacing must not be changed; follow the stackup information provided in the reference design (see the following figure).

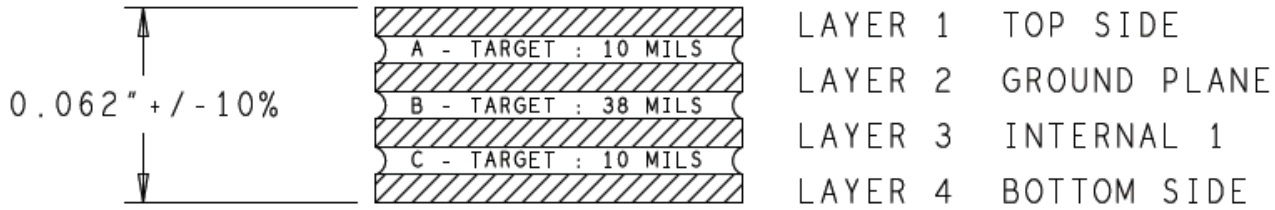

Figure 27. FRDM-KW40Z PCB layer stackup cross-section (four-layer)

- Solder mask is required
- Silk screen is required

5.2 Panelization

The panel size can be negotiated according to production volume.

5.3 Materials

The PCB composite materials must meet these requirements:

- Laminate—the base material (laminate) must be FR4. If you use other laminate material, then the RF electrical characteristics may change and degrade the RF performance.
- Copper foil:
  - Top and bottom copper layers must be 1 oz. copper.
  - Interior layers must be 1 oz. copper.
- Plating—all pad plating must be Hot Air Levelling (HAL).

5.4 Solder mask

The solder mask must meet these requirements:

- Solder mask type must be Liquid Film Electra EMP110 or equivalent.
- Solder mask thickness must be 10-30 µm.

5.5 Silk screen

The silk screen must meet these requirements:

- Silk screen color must be white.
- Silk screen must be applied after applying solder mask (if solder mask is required).
- The silk screen ink must not extend into any plated-thru-holes.
- The silk screen must be clipped back to the line of resistance.

5.6 Electrical PCB testing

- All PCBs must be 100 % tested for opens and shorts.
- Impedance measurement report is not mandatory.

5.7 Packaging

Packaging for the PCBs must meet these requirements:

- Finished PCBs must remain in panel.
- Finished PCBs must be packed in plastic bags that do not contain silicones or sulphur materials (those materials can degrade solderability).

5.8 Hole specification/tool table

See the *ncdrill-1-4.tap* file included with the Gerber files and the *FAB-28379.pdf* file.

5.9 File descriptions

Files provided with the download include Design, Gerber, and PDF files. Gerber files are RS-274x format. Not all files included with the Gerber files are intended for PCB manufacturing.

The included PDF files are:

- *FAB-28379.pdf*—FRDM-KW40Z board fabrication drawing.
- *GRB-28379.zip*—FRDM-KW40Z board metal layers, solder mask, solder paste, and silk screen.
- *SPF-28379.pdf*—FRDM-KW40Z board schematic diagram.

Design files are in Allegro format with OrCAD schematic capture.

6 Revision history

Rev. number	Date	Substantive change(s)
1	06/2015	Schematic, layout and block diagram update; initial release.
2	09/2015	Schematic, layout and figures.

How to Reach Us:

Home Page:
www.freescale.com

Web Support:
www.freescale.com/support

Information in this document is provided solely to enable system and software implementers to use Freescale products. There are no express or implied copyright licenses granted hereunder to design or fabricate any integrated circuits based on the information in this document.

Freescale reserves the right to make changes without further notice to any products herein. Freescale makes no warranty, representation, or guarantee regarding the suitability of its products for any particular purpose, nor does Freescale assume any liability arising out of the application or use of any product or circuit, and specifically disclaims any and all liability, including without limitation consequential or incidental damages. “Typical” parameters that may be provided in Freescale data sheets and/or specifications can and do vary in different applications, and actual performance may vary over time. All operating parameters, including “typicals,” must be validated for each customer application by customer’s technical experts. Freescale does not convey any license under its patent rights nor the rights of others. Freescale sells products pursuant to standard terms and conditions of sale, which can be found at the following address: www.freescale.com/SalesTermsandConditions.

Freescale, the Freescale logo, Kinetis, and Freescale Freedom are trademarks of Freescale Semiconductor, Inc., Reg. U.S. Pat. & Tm. Off. All other product or service names are the property of their respective owners. ARM, the ARM Powered logo, Cortex, and Cortex-M0+ are registered trademarks of ARM Limited (or its subsidiaries) in the EU and/ or elsewhere. All rights reserved.

© 2015 Freescale Semiconductor, Inc.

Document Number: FRDMKW40ZUG
Rev. 2
10/2015